Republic of Rwanda
Ministry of Education

RTB | RWANDA TVET BOARD

BDCPC301 -

CSAPS501 -

COMPUTER POWER SYSTEM DEVELOPMENT

Develop Computer Power System

Competence

RQF Level: 5

Learning Hours 100

Credits: 10

Sector: ICT AND MULTIMEDIA

Trade: COMPUTER SYSTEM AND ARCHITECTURE

Module Type: Specific

Curriculum: ICTCSA5001-TVET CERTIFICATE V IN COMPUTER SYSTEMS AND ARCHITECTURE

Prepared by: Sahinkuye ignace

2024-25

<table>
<tr><td>Purpose statement</td><td colspan="5">This specific module describes the skills, knowledge, and attitude required to develop computer power system. Upon completion of this module, the learners will be able to prepare the working environment, implement power electronic converters, implement a power supply unit of a computer system and implement computer power management system.</td></tr>
<tr><td>Learning assumed to be in place</td><td colspan="5">N/A</td></tr>
<tr><td rowspan="6">Delivery modality</td><td colspan="2">Training delivery</td><td>100%</td><td colspan="2">Assessment</td><td>Total 100%</td></tr>
<tr><td colspan="2">Theoretical content</td><td>30%</td><td rowspan="4">Formative assessment</td><td>30%</td><td rowspan="4">50%</td></tr>
<tr><td colspan="2">Practical work:</td><td rowspan="3">70%</td><td rowspan="3">70%</td></tr>
<tr><td>Group project and presentation</td><td>30%</td></tr>
<tr><td>Individual project /Work</td><td>40%</td></tr>
<tr><td colspan="2"></td><td colspan="3">Summative Assessment</td><td>50%</td></tr>
</table>

Elements of Competence and Performance Criteria	
Elements of competence	**Performance criteria**
1. Prepare the working environment	1.1. Computer system power requirement are analyzed based on its application
	1.2. System power consumption is properly calculated based on used components power ratings.
	1.3. Tools, Equipment and materials are properly selected based on system requirements
2. Implement power electronic converters	2.1. Power electronic converters is correctly designed based on the type of power electronic converters and its application
	2.2. Power electronic converter components are properly assembled based on schematic diagram
	2.3. Power electronic converter is successfully tested according to expected output.
3. Implement a Power Supply Unit (PSU) of a computer system	3.1. Computer power distribution system is correctly designed according to system power requirements
	3.2. Power supply unit are properly assembled in line with Computer power distribution system design
	3.3. Power supply unit is systematically tested according to expected output.
4. Implement computer power management system	4.1. Computer power management system architecture is properly designed based on the computer power system requirements
	4.2. Computer power backup is well designed based on the computer

	power system architecture
	4.3. Power Backup system is correctly integrated onto the existing power system
	4.4. Maintenance measures are correctly applied based on power backup structure.
	4.5. Power system cost is properly estimated according to the power system design

Knowledge, Skills, and Attitude		
Knowledge	**Skills**	**Attitude**
• Description of computer power distribution system • Identification of issues in a power system • Description of electrical principles and knowledge • Description of converters, inverters and power supplies • Description of battery technology and energy storage system	• Selecting tools, materials and equipment • Calculating the computer power system requirements • Resolving issues in a power system • Designing and develop a computer power system model • Designing and analyse power distributing • Test and validate a computer power system • Installation of power management system software • Document technical issues • Design a power backup system for a computer system • Integrating a power backup system into a computer system • Elaboration of a cost estimation	• Willingness to explore new ideas • Demonstrate team spirit while working with others. • Have attention to details. • Being rapid • Take responsibility. • Being organized. • Establish resilience in your daily activities.

Course content

Learning outcomes	At the end of the module the learner will be able to: 1. Prepare the working environment 2. Implement power electronic converters 3. Implement a Power Supply Unit (PSU) of a computer system 4. Implement computer power management system
Learning outcome 1: Prepare the working environment	**Learning hours: 15 hours**
Indicative content	

Introduction to Computer Power Supply

A computer power supply unit (PSU) is a crucial component that converts the main AC power into DC power, which is required to operate the various components within a computer system. It ensures a stable and reliable power supply to the CPU, GPU, RAM, storage devices, and other peripherals.

Key Concepts

- **Uninterruptible Power Supply (UPS):** A UPS is a device that provides backup power to a computer system in the event of a power outage. It uses a battery to supply power to the system until the main power is restored or the battery is depleted.
- **Power Management:** Power management refers to techniques used to optimize power consumption and extend battery life in portable devices. It involves various strategies like dynamic voltage and frequency scaling, sleep modes, and power-saving features.
- **Efficiency:** Efficiency measures how effectively a power supply converts input power into usable output power. A higher efficiency rating means less power is wasted as heat.
- **Ripple Voltage and Current:** Ripple refers to small fluctuations in the DC voltage or current output of a power supply. Excessive ripple can cause instability and damage to sensitive components.
- **Harmonic Distortion:** Harmonic distortion occurs when non-sinusoidal waveforms are introduced into the AC power supply. It can lead to increased power consumption, reduced power quality, and potential damage to electrical equipment.
- **Battery Management System (BMS):** A BMS is an electronic system that manages a battery pack, monitoring its state of charge, voltage, temperature, and other parameters. It ensures optimal battery performance and safety.
- **Power Converter:** A power converter is an electronic circuit that converts electrical power from one form to another, such as AC to DC or DC to AC. It is a fundamental component in power supplies and other electronic devices.

Description of Computer Power Supply

Types of Computer Power Supplies

- **ATX (Advanced Technology Extended):** The most common type of power supply used in desktop PCs.
- **SFX (Small Form Factor):** A smaller, more compact version of the ATX power supply, commonly used in small form factor (SFF) PC cases.
- **Micro-ATX:** A smaller version of the ATX power supply, suitable for micro-ATX motherboards.
- **Flex ATX:** A flexible form factor that allows for various power supply configurations.

Block Diagram of a Computer Power Supply

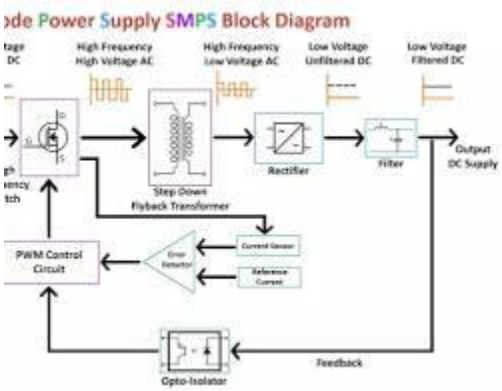

Opens in a new window www.hackatronic.com
block diagram of a computer power supply, showing the AC input, primary side, secondary side, and DC output

Features of Computer Power Supplies

- **Modular Design:** Allows for easy cable management and customization.
- **80 PLUS Certification:** Indicates the power supply's efficiency rating.
- **Multiple PCI-Express Power Connectors:** Supports high-end graphics cards.
- **Overvoltage Protection (OVP):** Protects components from damage due to excessive voltage.
- **Overcurrent Protection (OCP):** Protects components from damage due to excessive current.
- **Short Circuit Protection (SCP):** Protects components from damage due to short circuits.
- **Under Voltage Protection (UVP):** Protects components from damage due to insufficient voltage.

Advantages and Disadvantages of Computer Power Supplies

Advantages

- **Reliable power delivery**
- **Efficient power conversion**
- **Modular design for easy cable management**
- **Overvoltage, overcurrent, and short-circuit protection**
- **Multiple power connectors for various components**

Disadvantages

- **Can be noisy, especially under heavy load**
- **Can be expensive, especially high-end models**
- **Requires proper ventilation to prevent overheating**

Working Principle of Computer Power Supply

Power Conversion

A computer power supply unit (PSU) converts the incoming AC power from the wall outlet into various DC voltages required by different components within the computer system. This conversion involves two primary stages:

1. **AC to DC Conversion:**
    - **Rectification:** The AC input voltage is first rectified using diodes to convert it into a pulsating DC voltage.
    - **Filtering:** A capacitor is used to smooth out the pulsating DC voltage, resulting in a relatively stable DC voltage.
2. **DC to DC Conversion:**
    - **Voltage Regulation:** The filtered DC voltage is further regulated to produce multiple lower DC voltages, such as 3.3V, 5V, and 12V, using DC-DC converters. These converters employ techniques like switching mode power supplies (SMPS) to efficiently convert the input voltage to the required output voltages.

Power Distribution System

The power distribution system within a computer system consists of a network of cables and connectors that deliver the DC power from the PSU to various components. This system ensures that each component receives the appropriate voltage and current.

Analyzing Computer System Power Requirement

To design an efficient power supply, it's crucial to analyze the power requirements of different computer system components. This involves considering factors such as:

- **Idle Mode Power Consumption:** The power consumed by the system when it's not actively performing tasks.
- **Sleep Mode Power Consumption:** The power consumed by the system when it's in a low-power state.
- **Maximum Load Power Rating:** The peak power demand of the system under heavy workload.

Common Computer System Components and Their Power Consumption:

- **CPU:** Varies widely based on the processor model and workload.
- **GPU:** Can consume significant power, especially high-end gaming GPUs.
- **RAM:** Relatively low power consumption.
- **Storage Drives (HDD/SSD):** Low power consumption, but HDDs consume more than SSDs.
- **Motherboard:** Consumes power for various components, including chipsets and I/O controllers.
- **Fans:** Consume minimal power, but their collective power consumption can add up.
- **Peripherals (monitors, keyboards, mice):** Vary in power consumption.

Computer Power System Architecture

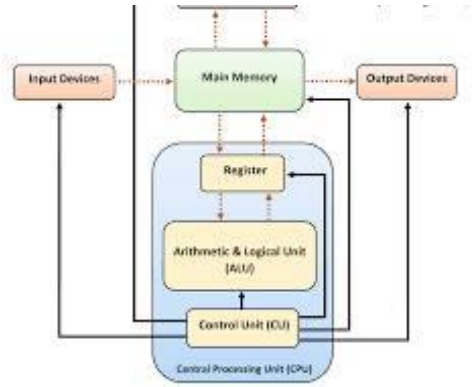

Opens in a new window en.wikipedia.org
computer power system architecture diagram

In the diagram:

1. **AC Power Input:** The power supply unit receives AC power from the wall outlet.
2. **AC to DC Conversion:** The AC power is converted to DC power through rectification and filtering.
3. **DC to DC Conversion:** The DC power is further converted to multiple lower DC voltages using DC-DC converters.
4. **Power Distribution:** The DC power is distributed to various components through cables and connectors.

Analysis of Power Supply Unit (PSU) Features

Efficiency Consideration:

- **80 PLUS Certification:** This certification indicates the PSU's efficiency rating. Higher efficiency ratings (e.g., 80 PLUS Platinum, Titanium) lead to lower energy consumption and reduced operating costs.
- **Temperature Control:** A well-designed PSU with efficient cooling mechanisms can maintain optimal operating temperatures, improving efficiency and longevity.

Expansion and Upgrades:

- **Modular Design:** Modular PSUs allow for easy customization and future upgrades by adding or removing specific power cables as needed.
- **Sufficient Power Output:** Ensure the PSU has enough wattage to handle future upgrades, such as adding more powerful GPUs or additional storage drives.

Verify Compatibility:

- **ATX Standard:** Ensure the PSU complies with the ATX standard to be compatible with standard motherboards and cases.
- **Cable Lengths:** Verify that the cable lengths are sufficient to reach all components within your case.
- **Connector Types:** Ensure the PSU has the necessary connectors for your specific components (e.g., 24-pin motherboard connector, 8-pin CPU power connector, PCIe power connectors).

Form Factor:

- **ATX:** Standard size for most desktop PCs.
- **SFX:** Smaller form factor for compact builds.

- **Micro-ATX:** Smaller than ATX, suitable for smaller cases.

Environmental Impact:

- **Efficiency:** A more efficient PSU reduces energy consumption and greenhouse gas emissions.
- **Recycling:** Choose a PSU from a manufacturer with responsible recycling programs.

Safety Margins:

- **Overvoltage Protection (OVP):** Protects components from damage due to excessive voltage.
- **Overcurrent Protection (OCP):** Protects components from damage due to excessive current.
- **Short-Circuit Protection (SCP):** Protects components from damage due to short circuits.
- **Under Voltage Protection (UVP):** Protects components from damage due to insufficient voltage.

Budget and Cost Considerations:

- **Balance Performance and Price:** Consider the balance between efficiency, features, and cost.
- **Future-Proofing:** Invest in a PSU that can handle future upgrades to avoid needing to replace it sooner.

Calculation of System Power Consumption

1. **Component Power Consumption:**
    - Determine the power consumption of each component (CPU, GPU, RAM, storage drives, motherboard, fans, peripherals).
    - Refer to manufacturers' specifications or use online tools to estimate power draw.
2. **Efficiency:**
    - Account for the PSU's efficiency rating. A higher efficiency rating means less power is wasted as heat.
3. **Total Harmonic Distortion (THD):**
    - Consider the PSU's THD rating, which measures the quality of the output voltage. Lower THD is better.
4. **Power Fluctuations:**
    - Factor in potential power fluctuations from the wall outlet, especially in areas with unstable power supplies.

Selection of Tools, Materials, and Equipment

Tools:

- Screwdriver
- Wire strippers
- Cable ties
- Thermal paste applicator

Materials:

- Power supply unit
- Power cables
- Thermal paste

Equipment:

- Multimeter (for testing voltage and current)
- Power meter (for measuring overall system power consumption)

Resources required for the indicative content	
Equipment	• Personal Computer • PPEs • Oscilloscope • Multi-meter • Function generator • SMD rework station • DC Power supply • ESD workstation • Office UPS
Materials	• Isopropyl alcohol and cotton swabs • Electrical tapes and zip ties • Spare screws • Labeling materials • Connectors • Foam cleaner • Battery/cells • Jumper wires • Breadboard • PCB • Power cables • Glue stick • Drawing materials (papers and pencil)
Tools	• Screwdrivers • Needle-nose pliers • Universal plier

	• Tweezers • Flashlight or headlamp • Cable testers • ESD Tools applicator • Wire cutter/striper Pliers • Soldering iron • Desoldering pump • Glue gun • Circuit Simulation and drawing software (NI Multisim, Proteus, Autodesk Eagle, Easy EDA, matlab, CAD) • Drawing accessories
Facilitation techniques	• Demonstration • Individual and group work • Practical exercise • Trainer guided • Group discussion
Formative assessment methods	• Product assessment • Written assessment • Performance assessment • Oral presentation

Learning outcome 2: Implement power electronic converters	Learning hours: 35 hours

Indicative content

- **Designing power electronic converters**
  - ✓ Description of Power semiconductor devices

Designing Power Electronic Converters with Pictures

Power Semiconductor Devices

Power semiconductor devices are the fundamental building blocks of power electronic converters. They control the flow of electrical power, enabling efficient and versatile energy conversion.

Component Symbols:

Diodes:

Rectifier: Converts AC to DC

Freewheeling: Provides a path for current to flow when the main switch is off

Zener: Provides a constant voltage across its terminals

Transistors:

Bipolar Junction Transistor (BJT): Controlled by a base current

MOSFET (Metal-Oxide-Semiconductor Field-Effect Transistor): Controlled by a gate voltage

IGBT (Insulated Gate Bipolar Transistor): Combines the advantages of BJTs and MOSFETs

Thyristors:

SCR (Silicon Controlled Rectifier): Requires a trigger pulse to turn on

TRIAC (Triac): Can conduct current in both directions

Working Principles:

Diodes: Conduct current in one direction only. Rectifier diodes convert AC to DC by allowing only positive half-cycles to pass.

Transistors: Can be used as switches to control the flow of current. BJTs require a base current to turn on, while MOSFETs and IGBTs are controlled by a gate voltage.

Thyristors: Once triggered, they remain on until the current falls below a holding current.

Power Rating:

Power semiconductor devices are rated based on their maximum voltage, current, and power dissipation. These ratings determine the device's suitability for a particular application.

Applications of Power Semiconductor Devices:

Power Supplies: Rectification, filtering, and regulation of AC voltage to DC voltage.

Motor Drives: Control of motor speed and torque in various applications.

Inverters: Conversion of DC voltage to AC voltage for power generation or grid connection.

Uninterruptible Power Supplies (UPS): Provide backup power during power outages.

Solar and Wind Power Systems: Conversion of renewable energy into usable electricity.

By understanding the characteristics and applications of power semiconductor devices, engineers can design efficient and reliable power electronic converters for a wide range of applications.

- ✓ **Description of power converter**

Power Converters: A Comprehensive Overview

AC to DC Converter (Rectifier)

Function: Converts alternating current (AC) to direct current (DC).

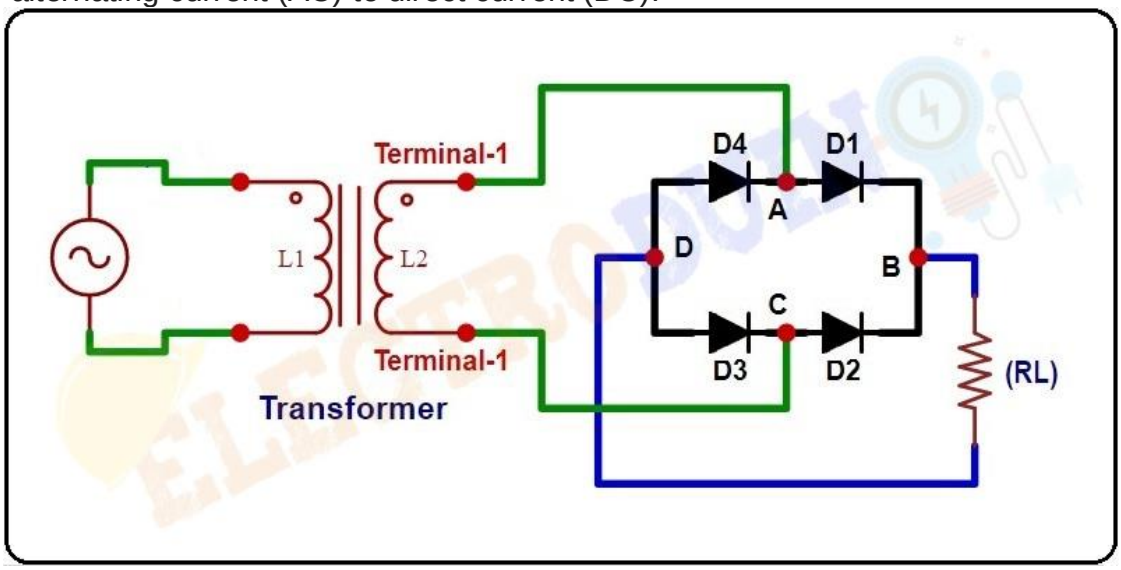

Circuit Diagram:

Components: Diodes, capacitor.

Operation: The diodes rectify the AC waveform, allowing only positive half-cycles to pass. The capacitor smooths the rectified waveform, producing a DC output.

DC to AC Converter (Inverter)

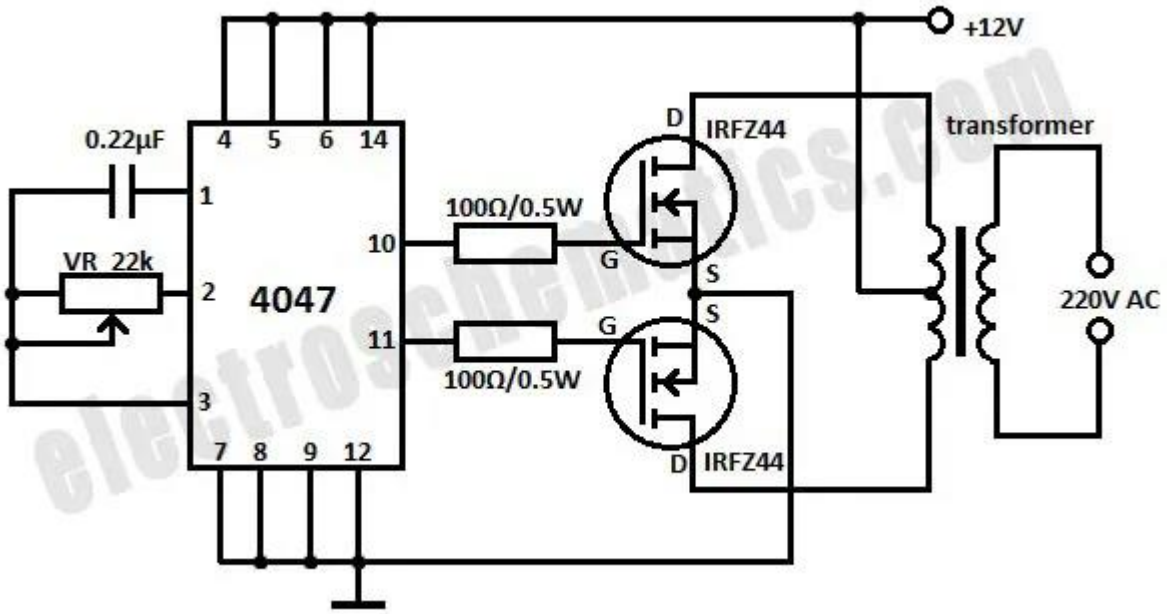

Function: Converts direct current (DC) to alternating current (AC). **Circuit Diagram:**

Components: Transistors (or MOSFETs), inductor, capacitor.

Operation: The transistors are switched in a specific sequence to create an AC waveform. The inductor and capacitor filter the output to reduce harmonics.

DC to DC Converter

Function: Converts direct current (DC) from one voltage level to another. **Circuit Diagram:**

Buck Converter:

Boost Converter:

Buck-Boost Converter:

Components: Transistor, inductor, capacitor.

Operation: The duty cycle of the transistor controls the output voltage. Buck converters reduce the voltage, boost converters increase the voltage, and buck-boost converters can either increase or decrease the voltage.

AC to AC Converter (Cyclo converter)

Function: Converts alternating current (AC) from one frequency to another. **Circuit Diagram:**

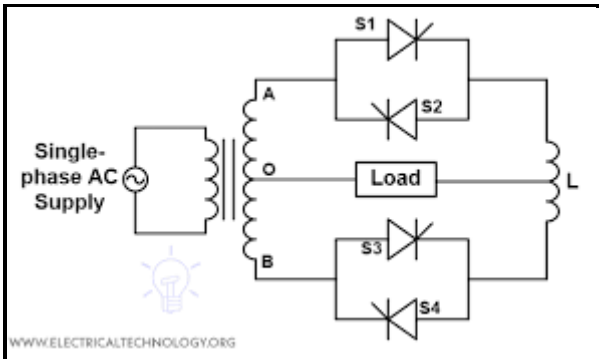

Components: Diodes, thyristors, transformers.

Operation: The cyclo converter uses multiple stages of rectifiers and inverters to produce an AC output at the desired frequency.

Key Applications:

AC to DC: Power supplies, battery chargers, solar inverters.

DC to AC: Uninterruptible power supplies (UPS), motor drives, solar inverters.

DC to DC: Voltage regulators, LED drivers, battery management systems.

AC to AC: Frequency converters, variable speed drives.

Factors to Consider:

Efficiency: The ability to convert power with minimal losses.

Power Rating: The maximum power the converter can handle.

Output Voltage/Current: The desired output characteristics.

Frequency: For AC to AC converters.

Cost: The price of the converter.

Size and Weight: Important for portable applications.

Reliability: The ability to function without failure.

Noise and EMI: Electromagnetic interference generated by the converter.

- ✓ Installation of simulation software

Installing Simulation Software and Creating Power Converter Circuits

Installing Simulation Software

There are several popular simulation software options available for designing and analyzing power electronic circuits. Here are two widely used options:

1. MATLAB/Simulink:

- **Download:** Visit the Math Works website and download the latest version of MATLAB/Simulink.
- **Installation:** Follow the on-screen instructions to install the software.
- **Power Electronics Toolbox:** Ensure the Power Electronics Toolbox is installed to access specific components and models for power electronic circuits.

2. PSIM:

- **Download:** Visit the PSIM website and download the latest version of the software.
- **Installation:** Follow the on-screen instructions to install the software.

Drawing Power Converter Circuit Diagrams

Both MATLAB/Simulink and PSIM provide graphical interfaces for creating circuit diagrams. You can drag and drop components from libraries and connect them using wires.

Example Circuit Diagram (MATLAB/Simulink):

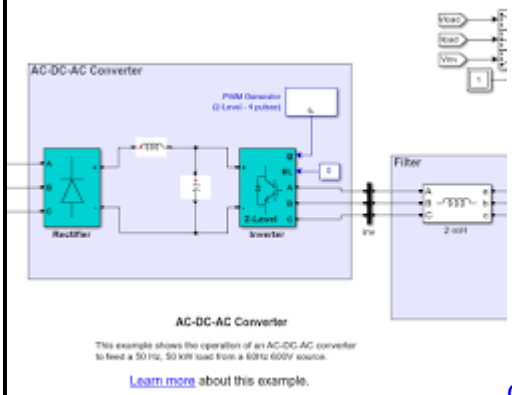

Opens in a new window www.mathworks.com

MATLAB/Simulink circuit diagram for an ACDC converter

Example Circuit Diagram (PSIM):

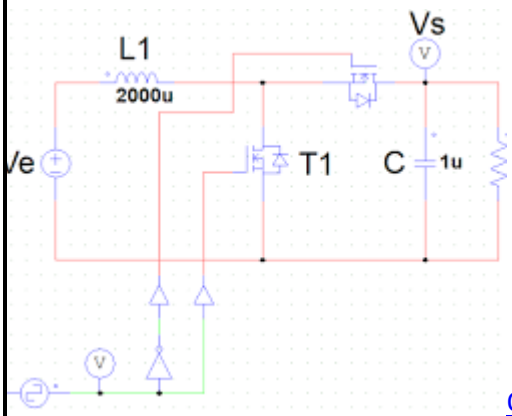

Opens in a new window www.researchgate.net

PSIM circuit diagram for a DCDC converter

Simulating Power Converters

Once you have created the circuit diagram, you can simulate it to analyze its behavior.

1. Setting Simulation Parameters:

- **Simulation time:** Specify the duration of the simulation.
- **Solver:** Choose a suitable solver for the type of circuit (e.g., ode45, ode23).
- **Initial conditions:** Set the initial values for variables.

2. Running the Simulation:

- Click the "Run" or "Play" button in the simulation software.

3. Analyzing Results:

- Plot waveforms of voltage, current, and other variables.
- Examine the circuit's performance, efficiency, and stability.

Example Simulation Results (MATLAB/Simulink):

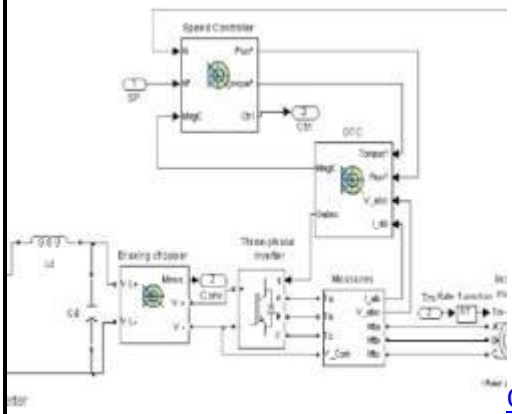

Opens in a new window www.researchgate.net

MATLAB/Simulink simulation results for an ACDC converter

Example Simulation Results (PSIM):

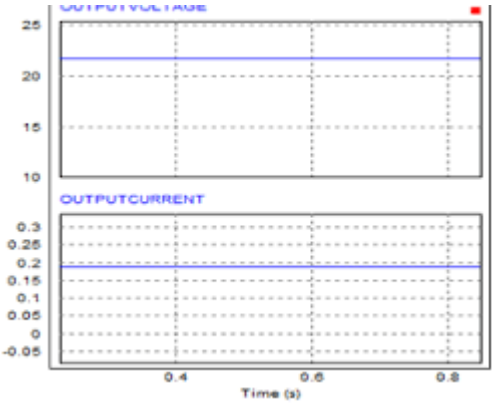

Opens in a new window www.researchgate.net

PSIM simulation results for a DCDC converter

Simulating Different Types of Converters:

- **AC to DC:** Use diodes, capacitors, and transformers to simulate rectifiers.
- **DC to AC:** Use transistors, inductors, and capacitors to simulate inverters.
- **DC to DC:** Use transistors, inductors, and capacitors to simulate buck, boost, buck-boost, and other types of converters.
- **AC to AC:** Use transformers, thyristors, and other components to simulate cycloconverters.

✓ Generate power converter PCB Design

PCB Design and Simulation Software

PCB design software provides tools to create physical layouts for electronic circuits. These layouts specify the placement of components and the routing of traces that connect them. Simulation software can be used to verify the design before fabrication, ensuring that the circuit will function as intended.

Integrating Simulation and PCB Design

1. **Circuit Simulation:**
   - Create and simulate the power converter circuit using software like MATLAB/Simulink or PSIM.
   - Analyze waveforms, efficiency, and other performance metrics.
2. **PCB Layout Creation:**
   - Import the simulated circuit into a PCB design software like Altium Designer, KiCad, or Eagle.
   - Place components on the PCB, considering factors like size, heat dissipation, and power supply routing.
   - Route traces between components, ensuring proper clearance and avoiding interference.

- **Assembling power electronic converter components**

Assembling Power Electronic Converter Components

Placing Components into PCB

Before soldering, it's essential to accurately place the components onto the PCB. This step often involves using a component placement machine or manual placement techniques.

component placement machine

- **Manual Placement:**
  - Use tweezers or a vacuum pen to pick up components.
  - Align the components with their corresponding pads on the PCB.
  - Gently press the components into place.

Soldering the Components

Soldering is the process of joining components to the PCB using molten solder.

Opens in a new window www.amazon.com

soldering iron and solder

- **Soldering Iron:** Heat the tip of the soldering iron to a suitable temperature.
- **Flux:** Apply flux to the soldering iron tip and the areas to be soldered. Flux helps prevent oxidation and improves solder flow.
- **Solder:** Touch the soldering iron tip to the joint and feed solder into the joint.
- **Joint Formation:** Ensure the solder forms a smooth, shiny, and void-free joint.

Wiring and Connection of Components

After soldering, connect the components using wires or jumpers.

Opens in a new window blog.sparkfuneducation.com

wire and a jumper

- **Wire Stripping:** Strip the insulation from the ends of the wires using a wire stripper.
- **Tinning:** Tin the wire ends by applying a small amount of solder to them.
- **Connection:** Solder the wires to the appropriate terminals or pads on the PCB.
- **Component Connection:** Connect components together using wires or jumpers as needed.

Additional Tips:

- **Component Orientation:** Ensure components are correctly oriented before soldering.
- **Heat Sink:** If components are prone to overheating, consider using heat sinks to dissipate heat.
- **Insulation:** Use insulation sleeves or heat shrink tubing to protect wires and prevent short circuits.
- **Testing:** After assembly, test the converter to ensure it's functioning correctly.

- **Testing power electronic converters**

Continuity Testing, Voltage and Current Measurement, and Output Waveform Analysis

Continuity Testing

Continuity testing is a fundamental step in troubleshooting electronic circuits. It involves checking if there is a continuous electrical path between two points.

Methods:

Multimeter: Use the ohmmeter function to measure resistance. A low resistance reading indicates continuity.

Continuity Tester: A dedicated tool with a buzzer or light that indicates continuity.

Applications:

Checking for broken traces on PCBs.

Verifying connections between components.

Detecting faults in wiring.

Voltage and Current Measurement

Measuring voltage and current is essential for understanding the operation of electronic circuits.

Multimeter:

Voltage Measurement: Set the multimeter to the appropriate voltage range (AC or DC) and connect the probes across the component or circuit.

Current Measurement: Insert the multimeter in series with the circuit to measure the current flowing through it.

Applications:

Verifying power supply output voltage.

Measuring current draw of components.

Debugging circuits by identifying abnormal voltage or current levels.

Output Waveform Analysis

Analyzing the output waveform of a power electronic converter provides valuable information about its performance.

Oscilloscope:

Waveform Capture: Connect the oscilloscope probes to the output of the converter.

Measurement: Measure parameters such as peak voltage, peak-to-peak voltage, frequency, and duty cycle.

Applications:

Identifying distortion in the output waveform.

Evaluating the converter's efficiency and regulation.

Troubleshooting issues related to switching frequency or control signals.

Additional Considerations:

Safety: Always follow safety precautions when working with electrical circuits.

Accuracy: Ensure the multimeter and oscilloscope are calibrated and used correctly.

Reference Values: Compare measured values to expected or reference values to identify anomalies.

By effectively using continuity testing, voltage and current measurement, and output waveform analysis, you can diagnose and troubleshoot power electronic converters efficiently.

Resources required for the indicative content	
Equipment	• Personal Computer • PPEs • Oscilloscope • Multi-meter • Function generator • SMD rework station • Drawing table • DC Power supply • ESD workstation • Office UPS
Materials	• Isopropyl alcohol and cotton swabs • Electrical tapes and zip ties • Spare screws • Labeling materials • Connectors • Foam cleaner • Battery/cells • Jumper wires • Breadboard • PCB

	• Power Semiconductor devices • Soldering materials • Power cables • Glue stick • Drawing materials (papers and pencil) • Electronic Passive Components
Tools	• Screwdrivers • Needle-nose pliers • Universal plier • Tweezers • Flashlight or headlamp • Cable testers • Wire cutter/striper Pliers • Soldering iron • Desoldering pump • Glue gun • Circuit Simulation and drawing software (NI Multisim, Proteus, Autodesk Eagle, Easy EDA, matlab, CAD) • Drawing accessories
Facilitation techniques	• Demonstration and simulation • Individual and group work • Practical exercise • Trainer guided • Group discussion
Formative assessment methods	• Product assessment • Written assessment

	• Performance assessment • Oral presentation

Learning outcome 3: Implement a Power Supply Unit (PSU) of a computer system	Learning hours: 20 hours

Indicative content

- **Designing computer power distribution system**

Designing Computer Power Distribution Systems

Interpreting Voltage Regulation

Voltage regulation is the process of maintaining a constant output voltage despite variations in input voltage or load. It's crucial for ensuring the reliable operation of electronic devices, especially computers.

Voltage Divider Circuit

A voltage divider circuit is a simple way to reduce a higher voltage to a lower voltage. It consists of two resistors in series. The output voltage is taken across one of the resistors.

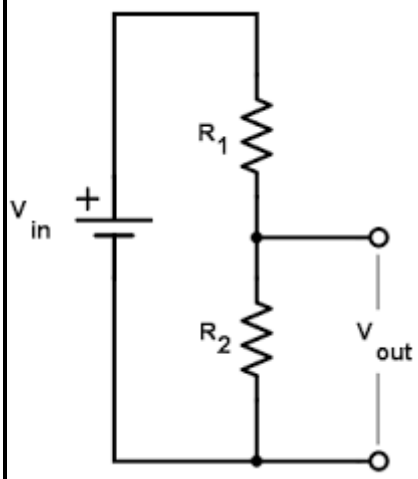

voltage divider circuit

Voltage Rails

Voltage rails are standardized voltage levels used in electronic systems. Common voltage rails in computers include:

- **3.3V:** Used for low-power components like microprocessors and memory.
- **5V:** Used for peripherals and I/O devices.

- **12V:** Used for high-power components like hard drives and fans.

Automatic Voltage Regulator (AVR)

An AVR is an electronic circuit that automatically maintains a constant output voltage. It uses feedback control to adjust its output to compensate for changes in input voltage or load.

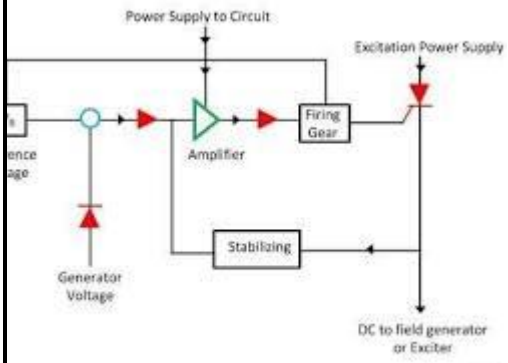

Opens in a new window circuitglobe.com

automatic voltage regulator

Voltage Regulator Module (VRM)

A VRM is a specialized integrated circuit (IC) that provides voltage regulation for specific components in a computer. It typically includes a power transistor, inductor, and capacitor.

voltage regulator module

Designing a Power Distribution Scheme

A power distribution scheme for a computer involves designing the circuitry to deliver the required voltages to various components. Key considerations include:

1. **Power Supply:** Select a power supply that can provide the necessary voltages and current ratings.
2. **Voltage Regulation:** Determine the required voltage regulation for each component and choose appropriate voltage regulators or VRMs.
3. **Power Distribution:** Design the wiring and connectors to efficiently distribute power to the components.
4. **Filtering:** Incorporate filters to reduce noise and fluctuations in the power supply.

5. **Protection:** Implement protection circuits like fuses or circuit breakers to prevent damage in case of faults.
6. **Thermal Management:** Ensure adequate cooling for components to prevent overheating.

Example Power Distribution Scheme:

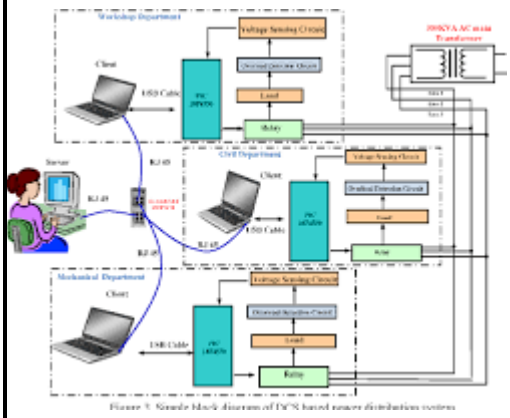

simplified computer power distribution scheme

In this example, the power supply provides 3.3V, 5V, and 12V rails. Voltage regulators or VRMs are used to further regulate the voltages for specific components. Filters are included to reduce noise and fluctuations.

Key Factors to Consider:

- **Efficiency:** Minimize power losses to improve overall system efficiency.
- **Reliability:** Use high-quality components and design for reliability.
- **Safety:** Ensure the power distribution system complies with safety standards.
- **Scalability:** Consider future expansion needs when designing the system.

- **Assembling power supply unit**
  - ✓ Description of a power supply types

Assembling a Power Supply Unit

Types of Power Supplies

1. Linear Power Supply:

- **Description:** Uses a linear regulator to convert AC to DC.
- **Components:** Transformer, rectifier, filter capacitor, linear regulator.
- **Advantages:** Low noise, simple design.
- **Disadvantages:** Low efficiency, large size.

2. Switched-Mode Power Supply (SMPS):

- **Description:** Uses high-frequency switching to convert AC or DC to DC.
- **Components:** Transformer, rectifier, filter capacitor, switching transistor, control IC.
- **Advantages:** High efficiency, small size, light weight.
- **Disadvantages:** Higher noise levels, potential for electromagnetic interference (EMI).

3. Uninterruptible Power Supply (UPS):

- **Description:** Provides backup power in case of a power outage.
- **Components:** Battery, inverter, rectifier.
- **Types:** Online, offline, line-interactive.

4. Programmable Power Supply:

- **Description:** Allows users to set the output voltage, current, and other parameters.
- **Components:** Microcontroller, power supply module.
- **Applications:** Laboratory testing, electronic prototyping.

5. Variable Power Supply:

- **Description:** Can adjust the output voltage and current over a wide range.
- **Components:** Similar to programmable power supplies.
- **Applications:** Testing various electronic devices.

Assembling a Power Supply

1. **Gather Components:** Collect the necessary components based on the desired power supply type.
2. **Layout:** Arrange the components on a PCB or breadboard according to the schematic.
3. **Soldering:** Solder the components to the PCB or breadboard, ensuring proper connections.
4. **Wiring:** Connect the input and output terminals, as well as any additional components.
5. **Testing:** Apply input power and measure the output voltage and current to verify functionality.

Additional Considerations:

- **Heat Sink:** For high-power components, use a heat sink to dissipate heat.
- **EMI Shielding:** If necessary, shield the power supply to reduce electromagnetic interference.
- **Safety:** Follow safety precautions when working with electrical circuits.

✓ Drawing of schematic diagram of power supply unit

Drawing Schematic Diagrams and Simulating Power Supply Units

Schematic Diagrams

Linear Power Supply:

linear power supply schematic diagram

Switched-Mode Power Supply (SMPS):

SMPS schematic diagram

Uninterruptible Power Supply (UPS):

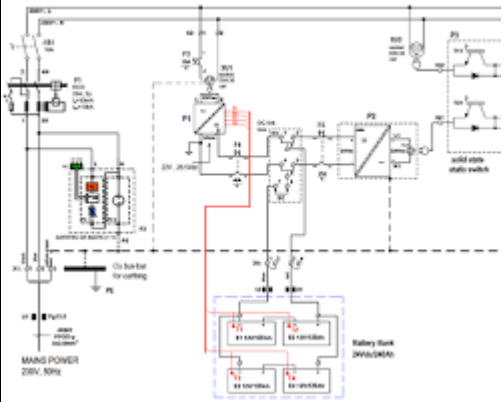

UPS schematic diagram

Programmable Power Supply:

programmable power supply schematic diagram

Variable Power Supply:

variable power supply schematic diagram

Simulating Power Supply Units

Simulation Software:

- **MATLAB/Simulink:** A powerful tool for simulating various electronic circuits, including power supplies.
- **PSIM:** A specialized software for power electronics simulation.
- **LTspice:** A free circuit simulator from Analog Devices.

Steps:

1. **Create a Circuit:** Draw the schematic diagram of the power supply unit using the simulation software.
2. **Set Parameters:** Define component values, input voltage, and other relevant parameters.
3. **Run Simulation:** Simulate the circuit to analyze its behavior.

4. **Analyze Results:** Examine waveforms, efficiency, and other performance metrics.

Example Simulation Results:

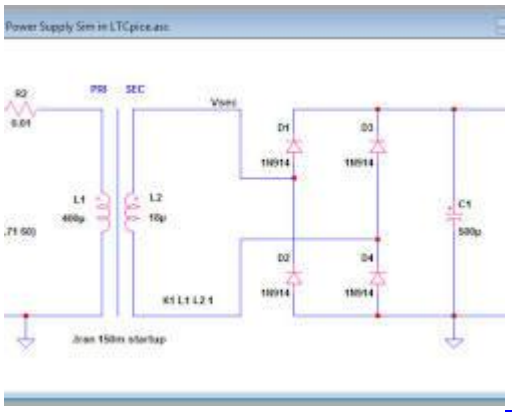

simulation results for a linear power supply

Key Considerations:

- **Component Selection:** Choose appropriate components based on the desired power supply specifications.
- **Control Algorithms:** For SMPS and programmable power supplies, design or use existing control algorithms to regulate output voltage and current.
- **Efficiency:** Optimize the design to minimize power losses and improve efficiency.
- **Stability:** Ensure the power supply is stable under varying load conditions.
- **EMI:** Minimize electromagnetic interference to prevent noise and interference with other devices.

Generating Power Supply PCBs and Assembling Units

Generating Power Supply PCBs

Once you have a confirmed circuit design and simulation results, you can create a PCB layout.

PCB Design Software:

Altium Designer: A professional-grade PCB design tool.

KiCad: A free and open-source PCB design suite.

Eagle: Another popular free and open-source PCB design tool.

Steps:

Import Schematic: Import the schematic diagram into the PCB design software.

Component Placement: Place components on the PCB, considering factors like size, heat dissipation, and power supply routing.

Routing: Connect components using traces, ensuring proper clearance and avoiding interference.

Design Rule Check (DRC): Verify that the layout adheres to design rules, such as minimum trace widths, clearances, and pad sizes.

Electromagnetic Interference (EMI) Analysis: Use simulation tools to assess EMI and make necessary modifications.

Thermal Analysis: Simulate the thermal performance of the PCB to ensure adequate cooling.

Gerber File Generation: Generate Gerber files, which are used by PCB manufacturers.

PCB Fabrication:

Online PCB Manufacturers: Many online services offer PCB fabrication, often with quick turnaround times.

Local Manufacturers: Check for local PCB manufacturers in your area.

Assembling the Power Supply Unit

Components:

PCB

Components (transistors, resistors, capacitors, etc.)

Soldering iron

Solder

Flux

Steps:

Prepare the PCB: Clean the PCB surface.

Place Components: Carefully place components onto their designated pads.

Soldering: Solder components to the PCB using a soldering iron and flux.

Wire Connections: Connect any necessary wires or jumpers between components.

Testing: Test the assembled power supply unit to ensure it's functioning correctly.

Additional Considerations:

Heat Sinks: Use heat sinks for components that generate significant heat.

Shielding: If necessary, shield the power supply to reduce EMI.

Testing Equipment: Use a multimeter and oscilloscope to measure voltage, current, and waveforms.

Safety: Always follow safety precautions when working with electrical circuits.

By following these steps, you can successfully generate a power supply PCB and assemble the unit.

Testing and Verification of Power Electronic Converters

Visual Inspection

Physical Damage: Check for any visible damage to the converter, such as cracks, burns, or loose components.

Component Integrity: Verify that all components are properly installed and secured.

Wiring: Inspect the wiring for any loose connections, shorts, or open circuits.

Input Voltage and Current Measurement

Input Voltage: Use a multimeter to measure the input voltage and ensure it's within the specified range.

Input Current: Measure the input current to assess the converter's efficiency and load requirements.

Output Voltage and Current Measurement

Output Voltage: Measure the output voltage under various load conditions to verify regulation and stability.

Output Current: Measure the output current to assess the converter's capacity and overload protection.

Transient Response

Step Load: Apply a sudden change in load and measure the converter's response time and overshoot.

Line Voltage Transient: Simulate a sudden voltage spike or dip and observe the converter's behavior.

Ripple Measurement

Output Ripple: Measure the AC component of the output voltage to assess the converter's filtering effectiveness.

Overload and Short Circuit Protection

Overload: Exceed the rated output current and verify that the converter's protection mechanisms activate.

Short Circuit: Create a short circuit at the output and ensure the converter shuts down safely.

Temperature Test

Operating Temperature: Operate the converter under various ambient temperature conditions and measure its performance.

Thermal Protection: Verify that the converter's thermal protection mechanisms function as intended.

EMI/EMC Testing

Electromagnetic Interference (EMI): Assess the converter's susceptibility to and emission of electromagnetic interference.

Electromagnetic Compatibility (EMC): Ensure the converter can operate in its intended environment without causing or being affected by interference.

Safety Testing

Isolation: Measure the isolation resistance between the input and output to ensure safety.

Ground Leakage Current: Measure the ground leakage current to verify compliance with safety standards.

Overvoltage Protection: Verify that the converter's overvoltage protection mechanisms function properly.

Safety Certifications: Ensure the converter complies with relevant safety standards (e.g., UL, CE).

By conducting these tests, you can verify the performance, reliability, and safety of power electronic converters.

Resources required for the indicative content	
Equipment	• Personal Computer, • PPEs, • Oscilloscope, • Multi-meter, • Function generator, • ESD Workbench, • SMD rework station, • Blower, • DC Power supply,

Materials	• Isopropyl alcohol and cotton swabs • Electrical tapes and zip ties • Spare screws • Labeling materials • Connectors • Foam cleaner • Battery/cells • Jumper wires • Breadboard • PCB • Power Semiconductor devices • Soldering materials • Power cables • Glue stick • Drawing materials (papers and pencil) • Electronic Passive Components
Tools	• Screwdrivers • Needle-nose pliers • Universal plier • Tweezers • Flashlight or headlamp • Cable testers • ESD Tools applicator • Wire cutter/striper Pliers • Soldering iron • Desoldering pump • Glue gun • Circuit Simulation and drawing software (NI Multisim, Proteus, Autodesk Eagle, Easy EDA, matlab, CAD)

	• Drawing accessories
Facilitation techniques	• Demonstration and simulation • Individual and group work • Practical exercise • Trainer guided • Group discussion
Formative assessment methods	• Product assessment • Written assessment • Performance assessment • Oral presentation

Learning outcome 4: Implement power management system	**Learning hours: 30 hours**
Indicative content	

- **Designing computer power management system architecture**
  - ✓ Assessment and requirements gathering

Power Requirements and Usage Pattern Evaluation:

To design an effective power management system, it's crucial to understand the specific power requirements and usage patterns of the computer. This involves:

Identifying Components: Determine the major components that consume significant power, such as the CPU, GPU, storage devices, and peripherals.

Assessing Power Consumption: Measure the power consumption of each component under different workloads (idle, low, medium, high).

Analyzing Usage Patterns: Observe how the computer is typically used throughout the day to identify peak power consumption periods and idle times.

Critical Components Identification:

Based on the power consumption assessment, identify the components that have the most significant impact on overall power usage. These components will be the primary targets for power management strategies.

Documenting Findings and Requirements:

Create a comprehensive document outlining the following:

Power Requirements: Specify the maximum and average power consumption of the computer.

Usage Patterns: Describe typical usage scenarios and identify peak power consumption periods.

Critical Components: List the components that contribute most to power consumption.

Goals: Define the objectives of the power management system, such as reducing energy consumption, improving battery life, or optimizing performance.

Visual Representation: Power Management System Architecture

The diagram typically includes the following elements:

Power Source: This can be a battery, AC adapter, or a combination of both.

Power Distribution Unit (PDU): A device that distributes power to various components.

Power Management Controller (PMC): A microprocessor responsible for monitoring power consumption, making decisions, and implementing power management strategies.

Sensors: Devices that measure various parameters, such as voltage, current, temperature, and workload.

Components: The individual components of the computer (e.g., CPU, GPU, storage devices, peripherals).

Power Management Strategies

Once the requirements are gathered, the PMC can implement various power management strategies, including:

Dynamic Voltage and Frequency Scaling (DVFS): Adjusting the CPU's voltage and frequency based on workload to reduce power consumption.

Idle States: Putting components into low-power states when they are not actively used.

Thermal Throttling: Reducing performance to prevent overheating.

Intelligent Power Scheduling: Optimizing power consumption based on usage patterns and priorities.

By carefully assessing requirements and implementing appropriate power management strategies, it is possible to design a computer power management system that effectively balances performance, energy efficiency, and user experience.

- ✓ Identify computer power management techniques

Computer Power Management Techniques

Sleep Modes

Sleep modes are energy-saving states that reduce power consumption when a computer is not in active use. There are typically three levels:

S1 (Standby): The computer is in a low-power state, but it can resume operation quickly. RAM contents are retained, allowing for a fast wake-up.

S2 (Suspend-to-RAM): The computer is in a deeper sleep state, with most components powered off. RAM contents are retained, but the wake-up time is slightly longer than S1.

S3 (Suspend-to-Disk): The computer is in the deepest sleep state, with all components powered off. RAM contents are saved to disk, and the wake-up time is the longest of the three modes.

Processor Power States

Processors can also enter various power states to reduce energy consumption:

C0 (Active): The processor is fully operational.

C1 (Idle): The processor is in a low-power state, but it can resume operation quickly.

C2 (Idle): A deeper idle state with some components powered off.

C3 (Idle): A very deep idle state with most components powered off.

C4 (Sleep): The processor is in a sleep state, and the wake-up time is longer.

Software Optimization

Software can also play a significant role in power management:

Power Management Settings: Operating systems and BIOS provide settings to configure sleep modes, processor power states, and other power-saving features.

Background Processes: Limiting the number and activity of background processes can reduce power consumption.

Screen Timers: Setting screen timeouts can help reduce power consumption when the computer is idle.

Power-Saving Features: Many applications have built-in power-saving features, such as reducing screen brightness or disabling unnecessary features.

Software Updates: Keeping software up-to-date can ensure that it is using the latest power-saving optimizations.

By effectively utilizing sleep modes, processor power states, and software optimization techniques, you can significantly reduce the power consumption of your computer and extend battery life.

Identify Power Saving Strategies

Dynamic Voltage and Frequency Scaling (DVFS)

DVFS is a technique that dynamically adjusts the CPU's voltage and frequency based on the workload. When the CPU is performing light tasks, it can reduce its voltage and frequency to save power. Conversely, when the CPU is handling demanding tasks, it can increase its voltage and frequency to improve performance.

Benefits of DVFS:

- **Reduced power consumption:** By operating at lower voltages and frequencies, the CPU can significantly reduce its power consumption.
- **Improved battery life:** For battery-powered devices, DVFS can extend battery life by reducing power consumption.
- **Reduced heat generation:** Lower power consumption also leads to reduced heat generation, which can improve system stability and reliability.

Smart Power Management Policies

Smart power management policies are algorithms and strategies that intelligently manage power consumption based on various factors, such as workload, battery level, and user preferences. These policies can be implemented at both hardware and software levels.

Examples of smart power management policies:

- **Adaptive power management:** This policy dynamically adjusts power consumption based on real-time workload and battery level.
- **Predictive power management:** This policy uses historical data and workload predictions to anticipate future power needs and optimize power consumption accordingly.
- **User-defined power profiles:** Users can create custom power profiles to define their preferred power management settings for different usage scenarios (e.g., high performance, balanced, power saver).

Benefits of smart power management policies:

- **Optimized power consumption:** Smart policies can effectively balance performance and energy efficiency.
- **Improved battery life:** By intelligently managing power consumption, these policies can extend battery life.

- **Enhanced user experience:** Smart policies can provide a seamless user experience while minimizing power consumption.

  By combining DVFS and smart power management policies, you can significantly reduce the power consumption of your computer or device and improve its overall efficiency and battery life.

✓ Describe battery management system

Battery Management System (BMS)

A Battery Management System (BMS) is a critical component in any battery-powered device, responsible for monitoring and managing the battery's health, status, and charging/discharging cycles.

Battery Monitoring

- **State of Charge (SOC):** The BMS continuously monitors the battery's SOC, which is the percentage of the battery's total capacity that is currently available.
- **State of Health (SOH):** The BMS assesses the battery's overall health, taking into account factors such as its capacity, internal resistance, and aging.
- **Cell Voltage:** The BMS monitors the voltage of each individual cell within the battery pack. This helps to ensure balanced charging and prevent cell imbalance, which can lead to premature failure.
- **Temperature:** The BMS monitors the temperature of the battery, as excessive heat or cold can affect battery performance and lifespan.

Managing Charge/Discharge Cycles

- **Charging:** The BMS controls the charging process, ensuring that the battery is charged to its optimal voltage and current levels. It also prevents overcharging, which can damage the battery.
- **Discharging:** The BMS monitors the battery's discharge rate and prevents excessive discharge, which can lead to premature aging. It also ensures that the battery is not discharged below its minimum voltage level.

Optimizing Charging Efficiency

- **Adaptive Charging:** The BMS can adjust the charging rate based on factors such as the battery's temperature, SOC, and SOH. This can help to optimize charging efficiency and minimize battery degradation.
- **Fast Charging:** Some BMSs support fast charging technologies, which allow for rapid charging without compromising battery health. However, fast charging can generate heat, so the BMS must carefully manage the charging process to prevent overheating.
- **Balanced Charging:** The BMS ensures that all cells within the battery pack are charged evenly, preventing cell imbalance and prolonging battery life.

Key Benefits of a BMS:

- **Improved Battery Safety:** A BMS helps to prevent battery-related safety hazards, such as overheating, overcharging, and short circuits.
- **Extended Battery Lifespan:** By optimizing charging and discharging cycles, a BMS can help to prolong the battery's lifespan.
- **Enhanced Performance:** A BMS ensures that the battery is operating at its optimal performance level.
- **Improved Reliability:** A well-designed BMS can improve the overall reliability and durability of a battery-powered device.

In conclusion, a BMS plays a vital role in ensuring the safe, efficient, and long-lasting operation of battery-powered devices. By monitoring battery health, managing charge/discharge cycles, and optimizing charging efficiency, a BMS helps to maximize the performance and lifespan of the battery.

✓ Selection of tools and technologies

Selection of Tools and Technologies

Hardware Components

- **Power Supply Unit (PSU):** A high-efficiency PSU is essential for efficient power delivery. Consider PSUs with certifications like 80+ Platinum or Titanium for optimal efficiency.

- **Motherboard:** Choose a motherboard with built-in power management features, such as advanced PWM controllers and support for power-saving technologies like DVFS.
- **Processor:** Opt for a processor with energy-efficient architecture and support for power-saving features like C-states.
- **Storage Devices:** Consider solid-state drives (SSDs) over traditional hard disk drives (HDDs) as they consume less power.
- **Peripherals:** Select peripherals with low power consumption, such as wireless devices and energy-efficient monitors.

Software

- **Operating System:** Choose an operating system with advanced power management features, such as Windows 11, macOS, or a Linux distribution with power-saving tools.
- **Power Management Utilities:** Consider using additional power management utilities or tools that offer more granular control over power settings.
- **Monitoring Tools:** Use tools to monitor power consumption, identify power-hungry components, and track the effectiveness of power management strategies.

Integration and Compatibility

- **BIOS/UEFI:** Ensure that the BIOS or UEFI firmware is up-to-date and supports the latest power management features.
- **Driver Compatibility:** Use compatible drivers for all hardware components to ensure proper power management functionality.
- **Software Integration:** Ensure that the operating system, power management utilities, and monitoring tools are compatible and work together seamlessly.

Develop Computer Power Management Plan

Initial Assessment and Planning

- **Identify Goals:** Clearly define the objectives of your power management plan, such as reducing energy consumption, improving battery life, or optimizing performance.

- **Assess Baseline Power Consumption:** Measure the current power consumption of your computer to establish a baseline for comparison.
- **Identify Power-Hungry Components:** Determine which components are consuming the most power.
- **Set Performance Targets:** Decide on the desired performance level and how much you are willing to sacrifice for energy savings.

Development of Power Management Policies and Profiles

- **Create Power Profiles:** Develop different power profiles (e.g., high performance, balanced, power saver) with varying settings for power management features.
- **Define Power Management Policies:** Establish rules and guidelines for how the computer should manage power consumption under different conditions.
- **Consider User Preferences:** Allow users to customize power management settings based on their preferences and needs.
- **Test and Refine:** Implement the power management policies and profiles, test their effectiveness, and make adjustments as needed.
- **Monitor and Evaluate:** Continuously monitor power consumption and evaluate the performance of the power management plan. Make necessary adjustments to optimize power savings.

By carefully selecting tools and technologies, developing a comprehensive power management plan, and implementing effective strategies, you can significantly reduce the power consumption of your computer and improve its overall efficiency and sustainability.

- **Designing power backup system components**

Description of Power Backup

Definition: A power backup system is a device or system that provides a secondary power source to ensure continuous operation of critical equipment in the event of a power outage.

Types:

- **Uninterruptible Power Supply (UPS):** Provides immediate backup power in case of a power outage, typically using batteries.
- **Generator:** A mechanical device that converts mechanical energy into electrical energy.
- **Solar Power System:** A system that uses solar panels to convert sunlight into electricity.
- **Battery Bank:** A collection of batteries that can store and deliver electrical energy.

Protection:

- **Surge Protection:** Protects equipment from voltage spikes and surges.
- **Ground Fault Circuit Interrupter (GFCI):** Protects against electrical shock by detecting current leakage to ground.
- **Circuit Breaker:** A safety device that automatically interrupts the electric current in case of an overload or short circuit.

Power Backup Technology

- **Lead-Acid Batteries:** Traditional batteries used in UPS systems, but they have lower energy density and require regular maintenance.
- **Lithium-Ion Batteries:** Newer technology with higher energy density, longer lifespan, and lower maintenance requirements.
- **Flywheel Energy Storage:** Uses a rotating flywheel to store kinetic energy and convert it into electrical energy.
- **Supercapacitors:** Store energy in an electric field and can provide very high power output for short durations.

Calculating Power Backup Size

Backup Time: The desired duration for which the backup system should provide power.**Total Power Delivered by Backup:** The total power required by the critical equipment.**Total Power Consumption by System:** The total power consumed by the backup system itself.
The backup system size should be calculated to provide sufficient power for the desired backup time while considering the system's own power consumption.

Identify Backup Power Sources

UPS:

- **Online UPS:** Provides continuous, uninterrupted power supply.
- **Line-Interactive UPS:** Provides backup power only during power outages.
- **Standby UPS:** Provides backup power with a short transfer time.

Lithium Battery Bank: Offers high energy density, long lifespan, and minimal maintenance.**Redundant Power Supply:** Provides multiple power sources for increased reliability.

Build Battery Charging System

Charging Method:

- **Constant Current Charging:** The charger maintains a constant current until the battery reaches its maximum voltage.
- **Constant Voltage Charging:** The charger maintains a constant voltage until the battery's charging current drops to a predetermined level.
- **Combination Charging:** Combines constant current and constant voltage charging for optimal efficiency.

Setting Charging Profile:

- **Charge Rate:** The rate at which the battery is charged.
- **Temperature Compensation:** Adjusts the charging rate based on the battery's temperature.
- **Equalization:** A process to ensure that all cells in the battery pack are charged to the same voltage.

Design Charging Controller:

- **Microcontroller or Programmable Logic Controller (PLC):** Controls the charging process based on battery parameters and charging profile.
- **Power Electronics:** Converts AC power to DC power for battery charging.
- **Sensors:** Measure battery voltage, current, temperature, and other parameters.

Testing Efficiency and Power Factor:

- **Efficiency:** The ratio of output power to input power.
- **Power Factor:** The measure of how effectively the charger utilizes the electrical power supplied to it.

Managing Temperature:

- **Cooling System:** Use fans or liquid cooling to maintain optimal battery temperature.
- **Temperature Sensors:** Monitor battery temperature and adjust charging rate accordingly.

Monitoring and Control of Batteries:

- **Battery Management System (BMS):** Monitors battery parameters and controls charging and discharging processes.
- **Data Logging:** Record battery data for analysis and maintenance.
- **Remote Monitoring:** Allow for remote monitoring and control of the battery charging system.

- **Integration of power backup system components**

Integration of Power Backup System Components

Compatibility Assessment

- **Voltage Compatibility:** Ensure that the power backup system's output voltage matches the requirements of the equipment it will be powering.
- **Communication Protocols:** Verify that the power backup system and the equipment it will be powering use compatible communication protocols for data exchange.
- **Physical Dimensions:** Ensure that the power backup system will physically fit into the available space and that its dimensions are compatible with other components.
- **Power Ratings and Capacities:** Verify that the power backup system has sufficient power rating and capacity to meet the needs of the equipment it will be powering.
- **Environmental Compatibility:** Ensure that the power backup system is compatible with the operating environment, including temperature, humidity, and altitude.

Component Placement Considerations

- **Space Utilization:** Optimize the placement of components to minimize the overall footprint of the power backup system.
- **Cable Management:** Plan for effective cable routing and management to avoid clutter and potential hazards.
- **Heat Dissipation:** Ensure that the components are placed in a way that allows for proper heat dissipation to prevent overheating.
- **Weight Distribution:** Consider the weight of the components and distribute them evenly to avoid strain on the mounting structure.
- **Future Expansion and Scalability:** Plan for future expansion by designing the system with sufficient space and flexibility to accommodate additional components.

Install Electrical Power Backup

- **Connector Compatibility:** Ensure that the connectors on the power backup system and the equipment it will be powering are compatible.
- **Wire Routing:** Plan the routing of wires to minimize interference and ensure safety.

- **Wire Termination:** Properly terminate wires to ensure secure connections and prevent short circuits.
- **Protection Devices:** Install appropriate protection devices, such as surge protectors and circuit breakers, to safeguard the equipment and the power backup system.
- **Grounding:** Ensure proper grounding of the power backup system to prevent electrical shock and provide a safe return path for current.

Apply Communication Interface

- **Identify Communication Needs:** Determine the specific communication requirements between the power backup system and other components.
- **Select Communication Protocols:** Choose appropriate communication protocols based on factors such as data transfer rate, reliability, and cost.
- **Interface Configuration:** Configure the communication interfaces on both the power backup system and the other components to establish a connection.
- **Battery Management System (BMS) Integration:** Integrate the BMS with the power backup system to enable effective monitoring and control of battery performance.

Integration of Power Backup to Power Supply Unit

- **Compatibility Assessment:** Ensure that the power backup system and the power supply unit are compatible in terms of voltage, current, and communication protocols.
- **Design Considerations:** Consider factors such as the transfer time between the power supply unit and the power backup system, synchronization, and redundancy.
- **Electrical Connections:** Connect the power backup system to the power supply unit using appropriate electrical connections.
- **Communication Interface:** Establish a communication interface between the power backup system and the power supply unit to enable data exchange and control.
- **Testing:** Thoroughly test the integrated system to ensure proper functionality and performance.

By carefully considering these factors and following best practices, you can successfully integrate the power backup system into your overall electrical system and ensure reliable and uninterrupted power supply for your critical equipment.

- **Maintaining power backup**

Maintaining Power Backup

Implement Monitoring Capabilities

Selection of Monitoring Tools:

- **Network Management Systems (NMS):** Centralized platforms for monitoring and managing network devices, including UPS systems.
- **UPS Management Software:** Specialized software designed for monitoring and controlling UPS systems.
- **Remote Monitoring Systems:** Allow for remote monitoring and control of UPS systems.

Integration of Monitoring Software:

- **Compatibility:** Ensure that the monitoring software is compatible with the UPS system and other network devices.
- **Configuration:** Configure the monitoring software to collect relevant data, such as battery voltage, load, and temperature.
- **Alert Settings:** Set up alerts for critical events, such as low battery levels, power outages, and system failures.

Establish Routine Maintenance Procedures

Scheduled Inspection:

- **Regular Checkups:** Conduct regular inspections of the UPS system to identify potential issues and ensure proper operation.
- **Frequency:** The frequency of inspections will depend on the criticality of the system and the manufacturer's recommendations.

Battery Maintenance:

- **Periodic Testing:** Conduct periodic load tests to assess battery capacity and performance.
- **Equalization:** Perform equalization cycles to ensure that all cells in the battery pack are charged to the same voltage.
- **Replacement:** Replace batteries as needed based on their age, capacity, and performance.

Safety Precautions Sticker:

- **Clear Labeling:** Apply safety precaution stickers to the UPS system to warn users of potential hazards, such as hot surfaces or electrical shock.

Cleaning and Housekeeping:

- **Regular Cleaning:** Keep the UPS system clean and free of dust and debris to prevent overheating and other issues.
- **Ventilation:** Ensure adequate ventilation to prevent overheating.

Documentation and Record-Keeping:

- **Maintenance Logs:** Keep detailed records of maintenance activities, including inspection results, battery replacements, and repairs.
- **Documentation:** Maintain documentation for the UPS system, including manuals, schematics, and warranty information.

Training and Personnel Development:

- **Staff Training:** Provide training to staff on the proper operation, maintenance, and troubleshooting of the UPS system.
- **Emergency Procedures:** Develop and practice emergency procedures for handling power outages and system failures.

By implementing effective monitoring capabilities and establishing routine maintenance procedures, you can ensure the reliable and long-lasting operation of your power backup system, protecting your critical equipment and minimizing downtime.

- **Estimation of power system cost**

Estimation of Power System Cost

Description of Cost Estimation

Definition: Cost estimation is the process of predicting the future cost of a project or product. It involves identifying and quantifying the resources required to complete the project, assigning costs to those resources, and summing the costs to arrive at a total estimate.

Model of Cost Estimation: A common model for cost estimation is the **Work Breakdown Structure (WBS)**, which is a hierarchical decomposition of a project into smaller, more manageable tasks. Each task is assigned a cost, and the total project cost is calculated by summing the costs of all tasks.

Types of Cost Estimates:

- **Order-of-Magnitude Estimate:** A rough estimate based on limited information, typically accurate within -50% to +50%.
- **Preliminary Estimate:** A more detailed estimate based on preliminary design information, typically accurate within -30% to +30%.

- **Definitive Estimate:** A highly detailed estimate based on final design and detailed specifications, typically accurate within -15% to +15%.

Description of Bill of Quantity (BOQ)

Definition: A BOQ is a detailed list of quantities of materials, equipment, and labor required to complete a project. It is used to estimate costs and plan resource requirements.
Content: A BOQ typically includes the following information:

- Item description
- Quantity
- Unit of measure
- Rate (cost per unit)
- Total cost

Design Bill of Quantity

To design a BOQ for a power system, consider the following components:

- **Materials:** Conductors, insulators, transformers, switches, circuit breakers, etc.
- **Equipment:** Generators, inverters, batteries, solar panels, etc.
- **Labor:** Installation, maintenance, and operation.
- **Site Preparation:** Clearing, excavation, and foundation work.
- **Permits and Licenses:** Necessary permits and licenses for construction and operation.

Applying Cost Estimation

Develop Cost Estimation Plan:

- **Identify Scope:** Clearly define the scope of the power system project.
- **Break Down Tasks:** Decompose the project into smaller, manageable tasks.
- **Assign Costs:** Determine the cost of each task based on market rates, historical data, and vendor quotes.
- **Create BOQ:** Develop a detailed BOQ for the project.

Sensitivity Analysis:

- **Identify Key Variables:** Identify the key variables that could significantly impact the project cost, such as material prices, labor rates, and unforeseen challenges.

- **Conduct Analysis:** Vary the key variables to assess their impact on the total project cost.

Design Cost Estimation Report:

- **Executive Summary:** Provide a brief overview of the project and the key findings of the cost estimation.
- **Detailed Breakdown:** Present a detailed breakdown of the project costs, including the BOQ and cost estimates for each task.
- **Sensitivity Analysis Results:** Summarize the results of the sensitivity analysis and discuss potential risks and uncertainties.
- **Conclusion:** Provide a final estimate of the total project cost and any recommendations for cost reduction or risk mitigation.

By following these steps and using a comprehensive cost estimation approach, you can accurately predict the cost of your power system project and make informed decisions about resource allocation and budget planning.

Resources required for the indicative content	
Equipment	• Personal Computer • PPEs • Oscilloscope • Multi-meter • Function generator • SMD rework station, • DC Power supply • Office UPS
Materials	

	• Soldering wire • Jumper wires • Breadboard • PCB • Power cables • Desoldering wick • Drawing materials (papers and pencil) • Electronic Passive Components

Tools	• Screwdrivers • Needle-nose pliers • Universal plier • Tweezers • Flashlight or headlamp • Cable testers • ESD Tools applicator • Wire cutter/striper Pliers • Soldering iron • Desoldering pump • Glue gun • Circuit Simulation and drawing software (NI Multisim, Proteus, Autodesk Eagle, Easy EDA, matlab, CAD) • Drawing accessories
Facilitation techniques	• Demonstration and simulation • Individual and group work • Practical exercise • Trainer guided • Group discussion
Formative assessment methods	• Product assessment • Written assessment • Performance assessment • Oral presentation

Integrated/Summative assessment

WWBXX COMPUTER Limited is a new computer manufacturing company located in MASORO Special Economic Zone. It aims at solving battery power saving problems of the computers on the market nowadays. Such as fluctuating power from adapters delivered to the system and power, saving problems that includes inaccurate battery indicators and overheating of laptop batteries.

As a technician, you are hired to develop a laptop power system of 19V DC, 80W and 3 hours power saving time, and determine power supply efficiency, optimal battery capacity, select suitable battery types and configurations, implementing rigorous safety measures, and evaluating portability for practical usage scenarios.

TASK

1. Preparing a cost estimate
2. Design a laptop adapter
3. Design a laptop backup power system
4. Integrate the power backup system into the laptop

Instruction:

1. Prepare clear and concise documentation explaining how to use and maintain the device.
2. This work must be done within 10 hours.

Information

Tools, materials, and equipment are provided.

RESSOURCES

Equipment	• Personal Computer • PPEs • Oscilloscope • Multi-meter

	• Function generator • SMD rework station, • Drawing table • DC Power supply • Office UPS
Tools	• Screwdrivers • Needle-nose pliers • Universal plier • Tweezers • Flashlight or headlamp • Cable testers • ESD Tools applicator • Wire cutter/striper Pliers • Soldering iron • Desoldering pump • Glue gun • Circuit Simulation and drawing software (NI Multisim, Proteus, Autodesk Eagle, Easy EDA, Matlab, CAD) • Drawing accessories
Materials	• Anti-static wrist strap/mat • Soldering wire (tin) • Soldering paste • Isopropyl alcohol and cotton swabs • Electrical tapes and zip ties, • Spare screws • Labeling materials • Connectors,

	• LM338, BC547, ICR 18650 2000mah 3.7V Li-ion cells • Resistor(120 Ω, 1kω, etc) • Potentiometer(4k7, 1k, 10k) • 100µf 25V capacitor • LM78XX • Diodes • Transformer • Fuse • Rectifier • Electronic relay • Glue stick • Foam cleaner • Soldering paste • Desoldering wire (desoldering wick) • Soldering wire • Jumper wires • Breadboard • PCB • Power cables • Drawing materials (papers and pencil).

Assessable outcomes	Assessment criteria (Based on performance Criteria)	Indicator	Observation		Marks Allocation
			Yes	No	
1. Prepare the working environment (15%)	Computer system power requirement are analyzed based on its application	Computer system parts are identified			2
		Computer system parts' power consumption are identified			1
		Computer power system architecture are drawn			1
	System Power consumption is properly calculated based on used components power ratings	Component power consumption are calculated			2
		Efficiency are calculated			2
		Total harmonic distortion are calculated			2
		Power fluctuations			2

	Tools, Equipment and materials are properly selected based on system requirements	Tools are selected			1
		Equipment are selected			1
		Materials are selected			1
2. Implement power electronic converters (35%)	Power electronic converters is correctly designed based on the type of power electronic converters and its application	Power semiconductor devices are described			3
		Power converter Are described			3
		Simulation software are installed			3
		Power converters circuit diagrams are drawn			3
		Power converter circuit diagram are simulated			3
		Power converter PCB design are generated			4
	Power electronic converter components are properly assembled based on schematic diagram	Components are placed into PCB			3
		Components are soldered			3

		Components are connected			3
		Power supply PCB are generated			3
		Power supply unit are assembled			4
	Power electronic converter is successfully tested according to expected output.	Power electronic converters are tested			3
3. Implement a Power Supply Unit (PSU) of a computer system (20%)	Computer power distribution system is correctly designed according to system power requirements	Voltage regulation are interpreted			4
		Power distribution scheme are designed			4
	Power supply unit are properly assembled in line with Computer power distribution system design	Power supply types are described			3
		Schematic diagram of power supply unit are drawn			3
		Power supply unit circuit diagrams are simulated			3
	Power supply unit is systematically tested according to expected output.	Computer Supply unit are Tested			3

4. Implement computer power management system (30%)	Computer power management system architecture is properly designed based on the computer power system requirements	Requirements gathering are Assessed			1
		Computer power management techniques are identified			1
		Power Saving strategies are identified			1
		Battery management system are described			1
		Backup tools and technologies are selected			1
		Computer power management plan are developed			1
	Computer power backup is well designed based on the computer power system architecture	Power backup size are calculated			2
		Backup power sources are identified			2
		Battery charging system are built			2

	Power Backup system is correctly integrated onto the existing power system	Compatibility are assessed			2
		Component placement considerations are assessed			2
		Electrical power backup are installed			2
		Communication interface are applied			2
		Power backup to power supply unit are integrated			2
	Maintenance measures are well applied based on power backup structure.	Monitoring capabilities are implemented			2
		Routine maintenance procedures are established			2
	Power system cost is properly estimated according to the power system design	BOQ is designed			2
		Cost estimation are applied			2
Total marks					**/100**
Percentage Weightage					**/100%**
Minimum Passing line % (Aggregate): 70%					

References:

1. Electrical technology, Volume 2, BL Theraja
   Https://www.mikesorcool.com>>spies>p...
2. Andrzej M. Trzynadlowski, Modern Power Electronics, Volume 3, (2016) by John Wiley & Sons, Inc. Hoboken, New Jersey
3. Power Supply Repair by Randy: 1994 Troubleshooting and repairing switch mode power supplies
   Https://readerspage:files.wordpress.com
4. Geier, M. J. (2011). How to diagnose and fix everything electronic. Mcgraw-Hill/TAB Electronics.
5. Power Supply Repair byranady.1994. Troubleshooting and repairing switch mode power supply
   Https: // readerspage: files.word press.com
6. Lee, G. (2021). *Troubleshooting & Fixing Common Problems in pcs & Laptops.* Seoul.
7. Mano, M. M. (2007). *Computer System Architecture | Third Edition.* New York: Pearson.
8. Power Electronics Handbook, Edition III, Muhamad H. Rachid, Ph. D, University of West Florida, 11000 University Parkway, 2011.

Glossary

- **Power Supply Unit (PSU)**: A hardware component that provides electrical power to a computer or other devices.
- **Wattage**: The measure of electrical power a PSU can deliver to the components in a system, typically measured in watts (W).
- **Efficiency**: The ratio of output power to input power, expressed as a percentage. A higher efficiency PSU wastes less power as heat.
- **Voltage**: The electrical potential difference between two points, typically measured in volts (V). PSUs provide different voltages (e.g., +12V, +5V, +3.3V) to different components.
- **Current**: The flow of electric charge, typically measured in amperes (A). PSUs supply different currents to different components based on their power requirements.

- **Direct Current (DC)**: An electrical current that flows in one direction, which is what PSUs provide to the components in a computer.
- **Alternating Current (AC)**: An electrical current that changes direction periodically, which is typically what is supplied by power outlets.

Abbreviations

- **PPEs**: Personal Protective Equipment
- **ESD**: Electrostatic Discharge
- **PSU:** Power Supply Unit
- **UPS:** Uninterruptable Power Supply
- **SPS:** Switching Power Supply
- **EMI:** Electromagnetic Interference
- **EMC:** Electromagnetic Compatibility
- **CAD:** Computer Aided Design
- **DC:** Direct Current
- **AC:** Alternating Current